Technical data sheet

Drum pumps F/FP 424

More than just pumps

Drum pumps F/FP 424

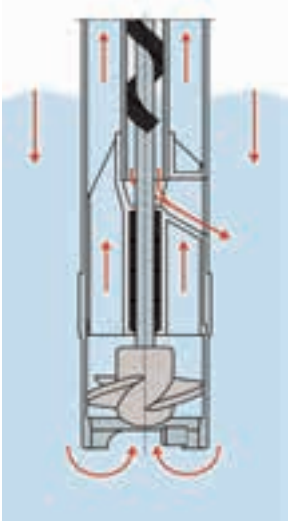

Advantages/characteristics:

- No seal in liquid zone
- Particularly suited for hydrochloric acid and chromic acid
- Spiral-shaped guide-bearing with large guide length
- Optimum drainage of the inner tube
- Multiple bearing drive shaft
- Low wearout of guide-bearing and shaft
- Long service life
- No seal wearout
- Long service life of bearings
- Temporary operation against closed valve is possible (hand nozzle, ball valve, etc.), up to indicated max. operating temperature
- Low-vibration
- Non-ferrous metalfree version to transport AdBlue® available

Technical data/type	F 424 PP	F 424 PVDF	FP 424 Ex S	FP 424 Ex HT S
Seal type	No seal in liquid zone			
Version	With impeller for max. flow rate, with mixed half axial impeller for max. delivery head (Z-version)			
Pressure-side connection	Thread G 1¼ A			
Materials				
Pump	Polypropylene	Polyvinylidene fluoride	Stainless steel 316 Ti	Stainless steel 316 Ti
O-ring[2]	FKM		FKM, FEP	FKM
Shaft	Hastelloy C, stainless steel, titanium	Hastelloy C	Stainless steel	Stainless steel
Impeller	ETFE			-
Dimensions				
Outer tube diameter / Impeller diameter (mm)	41/36 41/35 Z 50/38 50/43 Z	41/36 41/35 Z 50/38	43/38 43/37 Z 50/45 Z	43/38 43/37 Z 50/45 Z
Standard immersion depth (mm)	700, 1,000, 1,200			1,000
Other immersion depths / special lengths (mm)[3]	200 - 2,000			-
Operating range				
Container	Drums, IBCs, tanks, canisters, hobbocks, mixing containers etc.			
Media temperature (°C)	0 to +50	0 to +80	0 to +100	0 to +100
Media temperature ex-application (°C)	-	-	0 to +40	0 to +40
Ambient temperature (°C)	0 to +40	0 to +40	-20 to +40	-20 to +60
Weight Ø 41, ID 1,000 mm (kg)	1.0	1.4	-	-
Weight Ø 43, ID 1,000 mm (kg)	-	-	2.9	2.9
Weight Ø 50, ID 1,000 mm (kg)	1.3	1.9	4.0	-
Certificates				
Ex-designation	None	None	II 1/2 G c IIB T4	Ex II 1/2 G c IIB T3
Silicone-free version	On request			

Performance data[1]	Axial impeller	Half axial impeller (Z-version)	
Flow rate max. l/min.	240	160	-
Delivery head max. mwc	13	30	-
Viscosity max. mPas	1,200	1,200	-

1) Depending on pump version, media and motor
2) For sealing between inner and outer tube (above the fluid level)
3) In gradations of 100 mm

Design, assembly example and dimensions

Drum pumps F/FP 424

Design:

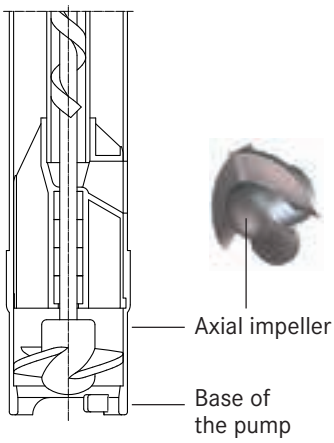

F/FP 424 with guide-bearing and axial impeller

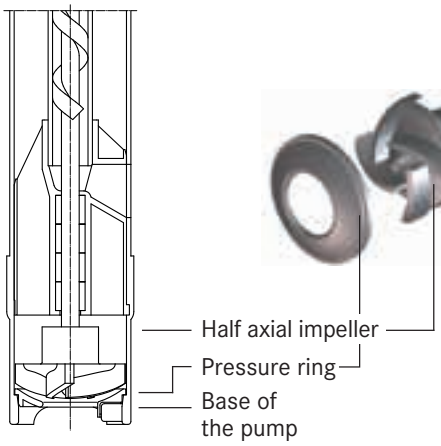

F/FP 424 with guide-bearing and half axial impeller (Z-version)

Assembly example:

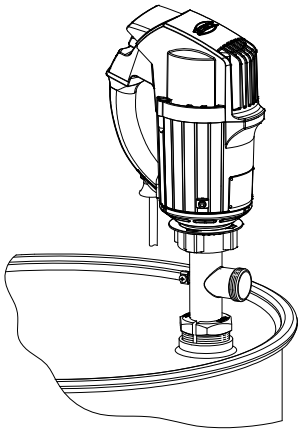

F/FP 424 with compression gland mounted in a drum with bunghole

Dimensions:

Drum pump F/FP 424

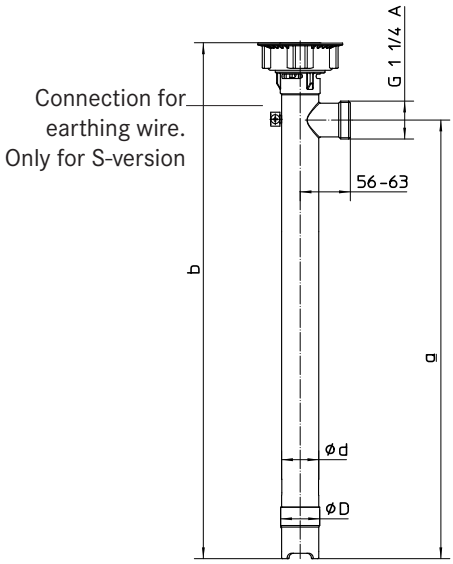

Drum pump with motor

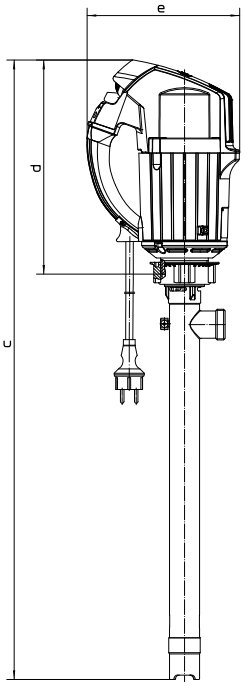

Immersion depths (ID)

Pump material	Ø (mm) Outer tube/impeller	ID (mm)	a (mm)	b (mm)
PP / PVDF	41/36 50/38 50/43 Z	700	715	790
		1,000	1,015	1,090
		1,200	1,215	1,290
		Other	ID + 15	ID + 90
PP / PVDF	41/35 Z	700	707	782
		1,000	1,007	1,082
		1,200	1,207	1,182
		Other	ID + 7	ID + 82
S	43/38 43/37 Z 50/45 Z	700	695	780
		1,000	995	1,080
		1,200	1,195	1,280
		Other	ID - 5	ID + 80

F/FP 424 with motor

Motor type	c (mm)	d (mm)	e (mm)
FEM 4070	b + d - 16	207	186
F 457 (EL)		225	217
F 458 (-1, EL)		292	209
F 460 Ex (-1, EL)		292	209
FBM 4000 Ex		292	209
F 416 Ex		119	230
F 416-1 Ex		101	120
F 416-2 Ex		101	120

Performance diagrams[1)]

Drum pumps F/FP 424

The following performance diagrams apply to the indicated motors and impellers (36, 38, 35 Z, 37 Z, 43 Z and 45 Z), for all pump materials respectively.

FEM 4070

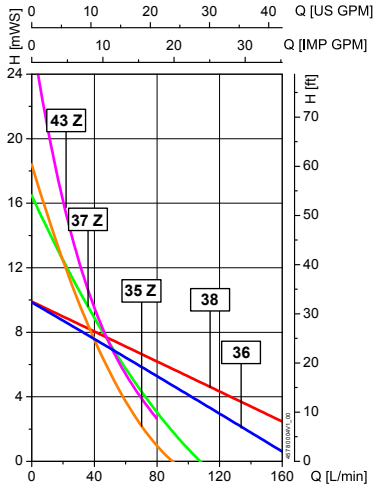

F 457 / F 457 EL

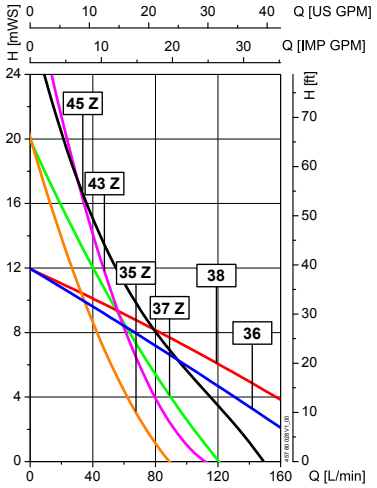

F 458, F 458 EL, F 460 Ex, F 460 Ex EL

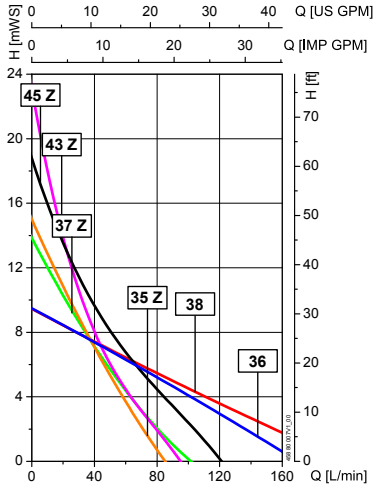

F 458-1 / F 460-1 Ex

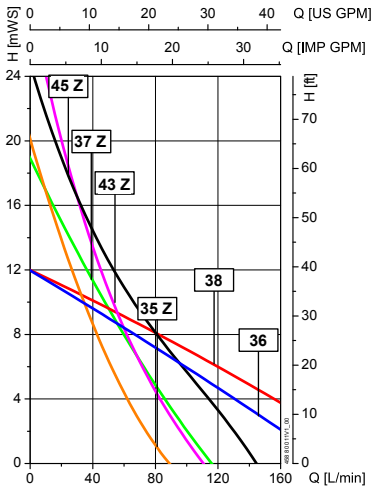

FBM 4000 Ex

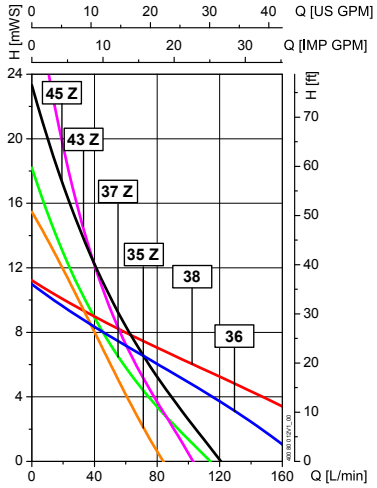

F 416 Ex, F 416-1 Ex, F 416-2 Ex (6 bar)

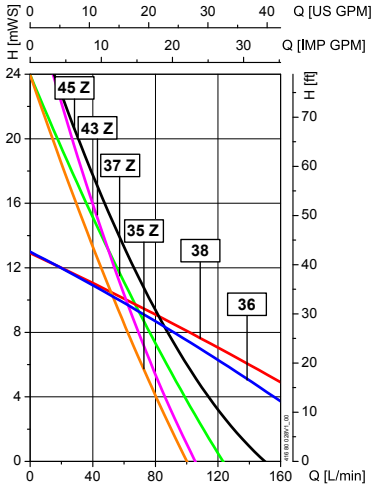

1) determined with water at 20 °C, measured values ± 10 % maximum flow rate with open discharge outlet

Part numbers

Drum pumps F/FP 424

Mehr als nur Pumpen

Standard immersion depths

Typ	Material			Diameter (mm)		Part no.		
	Pump	Shaft	O-ring[1)]	Ø outer tube	Ø impeller	700 mm	1,000 mm	1,200 mm
F 424 Connection thread G 1¼ A	PP	HC	FKM	41	36	10-424 40 007	10-424 40 010	10-424 40 012
			FKM		35 Z	10-424 40 107	10-424 40 110	10-424 40 112
			FKM	50	38	10-424 40 207	10-424 40 210	10-424 40 212
			FKM		43 Z	10-424 40 307	10-424 40 310	10-424 40 312
		Stainless steel	FKM	41	36	10-424 40 407	10-424 40 410	10-424 40 412
			FKM		35 Z		10-424 40 510	10-424 40 512
		Titanium	FKM	41	36	10-424 40 707	10-424 40 710	10-424 40 712
	PVDF	HC	FKM	41	36	10-424 60 007	10-424 60 010	10-424 60 012
			FKM		35 Z	10-424 60 107	10-424 60 110	10-424 60 112
			FKM	50	38	10-424 60 207	10-424 60 210	10-424 60 212
FP 424 Ex Connection thread G 1¼ A	S	S	FKM	43	38	10-424 22 007	10-424 22 010	10-424 22 012
			FKM		37 Z	10-424 22 107	10-424 22 110	10-424 22 112
			FEP	43	38	10-424 29 307	10-424 29 310	10-424 29 312
			FEP		37 Z	10-424 29 407	10-424 29 410	10-424 29 412
			FKM	50	45 Z	10-424 22 207	10-424 22 210	10-424 22 212
			FEP	50	45 Z	10-424 29 507	10-424 29 510	10-424 29 512
FP 424 Ex (HT) Connection thread G 1 ¼ A	S	S	FKM	43	38		10-424 22 310	
					37 Z		10-424 22 410	
				50	45 Z		10-424 22 510	

Special lengths

Typ	Material			Diameter (mm)		Part no.		
	Pump	Shaft	O-ring[1)]	Ø outer tube	Ø impeller	500 mm	800 mm	1,500 mm
F 424 Connection thread G 1¼ A	PP	HC	FKM	41	36	10-424 40 005	10-424 40 008	10-424 40 015
			FKM		35 Z			10-424 40 115
			FKM	50	38			10-424 40 215
		Stainless steel	FKM	41	35 Z			10-424 40 515
		Titanium	FKM	41	36			10-424 40 715
	PVDF	HC	FKM	41	36			10-424 60 015
			FKM		35 Z			10-424 60 115
			FKM	50	38			10-424 60 215
FP 424 Connection thread G 1¼ A	S	S	FKM	43	38	10-424 22 005		10-424 22 015
			FKM		37 Z	10-424 22 105		10-424 22 115
			FKM	50	45 Z	10-424 22 205		10-424 22 215

Other immersion depths/other O-rings/other connections on request.

1) For sealing between inner and outer tube (above the fluid level)

Hose connections with union nut G 1¼

Material		Size			
Connection	Union nut	DN 13	DN 19	DN 25	DN 32
Polypropylene (PP)	PP	10-959 04 081	10-959 04 053	10-959 04 052	10-959 04 054
Polyvinylidene fluoride (PVDF)	PVDF	10-959 04 082	10-959 04 101	10-959 04 102	10-959 04 103
Stainless steel (S) 316 Ti	Brass nickel-plated		10-959 04 061	10-959 04 041	10-959 04 042
Stainless steel (S) 316 Ti	S		10-959 04 062	10-959 04 063	10-959 04 064

Pump kits

Drum pumps F/FP 424

Pre-configured kits consist of:

1 Motor with cable and plug
2 Pump with mechanical seal
3 Hose line
4 Hand nozzle
5 Compression gland

Also for ex-applications

Pump kit	**For highly flammable liquids**			
Examples of media	Acetone, petrol, ethanol, methanol, butanol, toluene, xylene			
Flow rate max. (l/min.)	55[1] (240)[2]		50[1] (200)[2]	
Delivery head max. (mwc)	13[2]		9,5[2]	
Temperature max. (°C)	100 (with ex-applications max. 40)			
Viscosity (mPas)	800[2]		600[2]	
Pump	**FP 424 Ex S-43/38**			
Pump material	Stainless steel 316 Ti			
O-ring[3] material	FKM			
Immersion depth (mm)	1,000	1,200	1,000	1,200
Ex-designation	Ex II 1/2 G c IIB T4			
Motor	**F 416 Ex**		**F 460 Ex**	
Technical data	460 watt at 6 bar		230 V, 50 Hz, 460 watt	
Rpm setting	Optional		No	
Low-voltage protection	-		Yes	
Protection class	-		IP 55	
Connection cable length (m)	-		5	
Plug type	-		Safety plug	
Ex-designation	Ex II 2 G cp IIC T6		Ex II 2 G Ex de IIC T6	
Hose line	Universal, DN 21			
Length (m)	2, integrated electrically conductive			
Hose mounting	Hose fitting, brass			
Hand nozzle	Brass, PTFE			
Compression gland	PP, conductive			
Connection thread	G2			
Weight (kg)	7.4	7.9	10.9	11.4
Part no.	10-416 24 010	10-416 24 012	10-460 24 010	10-460 24 012

Pump kits	**For acids and lyes**		**For cleaning and disinfectant agent "FES 800"**	**AdBlue® for IBC-container drainage**	
Examples of media	Potassium hydroxide, sodium hydroxide, ammonia water, calcium hydroxide, caustic sulphite, formic acid (up to 50 %), acetic acid (up to 80 %)		Chlorine bleach (sodium hypochlorite), cleaning and disinfectant chemicals	AdBlue®, urea	
Flow rate max. (l/min.)	60[1] (165)[2]		60[1] (165)[2]	50[1] (85)[2]	35[1] (85)[2]
Delivery head max. (mwc)	9.5[2]		9.5[2]	18[2]	18[2]
Temperature max. (°C)	50		50	50	50
Viscosity (mPas)	600[2]		600[2]	800	8
Pump	**F 424 PP-41/36**		**F 424 PP-41/36**	**F 424 PP/S-41/35 Z**	
Pump material	PP, HC		PP, HC	PP, S	
O-ring[3] material	FKM		FKM	FKM	
Immersion depth (mm)	1,000	1,200	800 (for 60 litre canister)	1,200	
Motor	**FEM 4070**				
Technical data	230 V, 50 Hz, 500 watt				
Rpm setting	Yes				
Low-voltage protection	Yes				
Protection class	IP 24				
Connection cable length (m)	5				
Plug type	2-pole				
Hose line	PVC, DN 19		PVC, DN 19	PVC, DN 19	Special, DN 16
Length (m)	2		2	3	6
Hose mounting	2 hose clamps		2 hose clamps	2 hose clips	
Hand nozzle	PP, EPDM		PP, EPDM	PP, FKM	AL, FKM (self-closing)
Compression gland	PP, conductive		PP, conductive	PP, conductive	
Connection thread	G2		G2	G2	
Weight (kg)	5.1	5.3	4.9	10.1	10.1
Part no.	10-407 44 010	10-407 44 012	10-407 44 208	10-407 44 112	10-407 41 ZV6

1) In a kit with hose and hand nozzle
2) Applies only to pumps without hand nozzle, without hose
3) For sealing between the inner and outer tube (above the fluid level)

Accessories

Drum pumps F/FP 424

Accessories for drum pump F/FP 424

Compatible with drum pumps from the F/FP 424 series, we offer a wide selection of accessories, for example, compression glands, hoses, hand nozzles. More information can be found in the FLUX accessory brochure, in the price list or on our homepage: www.flux-pumps.com.

- for use in hazardous areas
- for use in non hazardous areas
- for use in hazardous and non hazardous areas

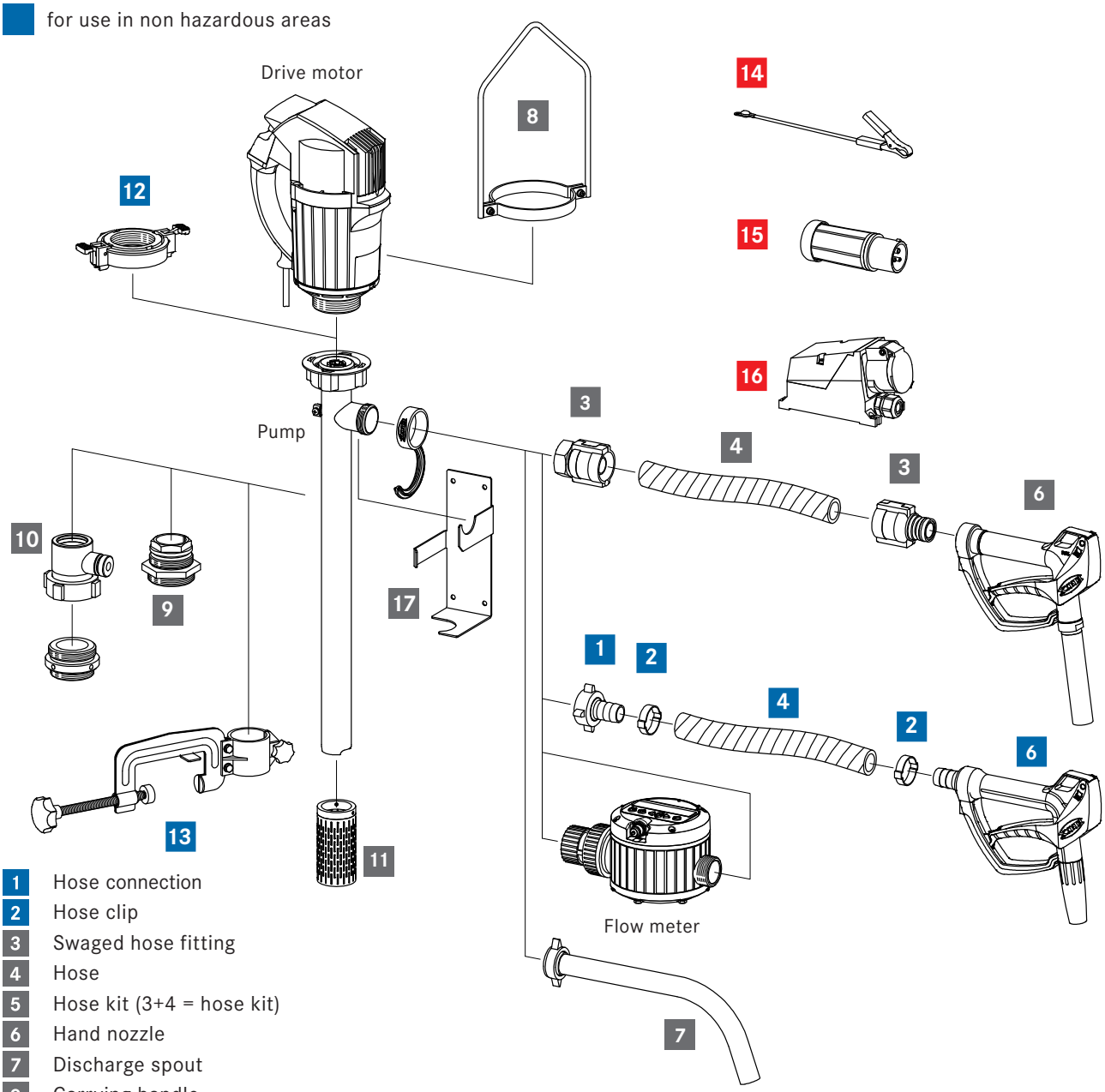

1 Hose connection
2 Hose clip
3 Swaged hose fitting
4 Hose
5 Hose kit (3+4 = hose kit)
6 Hand nozzle
7 Discharge spout
8 Carrying handle
9 Compression gland
10 FLUX fume gland
11 Suction strainer
12 Quick action coupling
13 Attachment clamp
14 Earth (ground) wire
15 Explosion-proof plug
16 Explosion-proof socket
17 Wall bracket

FLUX-GERÄTE GMBH
Talweg 12 · D-75433 Maulbronn
Tel +49 7043 101-0 · Fax +49 7043 101-444
info@flux-pumpen.de · www.flux-pumps.com

TD_FCP 0119 / 10-005 83 029 / 1-E printed in Germany